Rev #	A	05/14/20	Dimensions Updated.
Rev #			

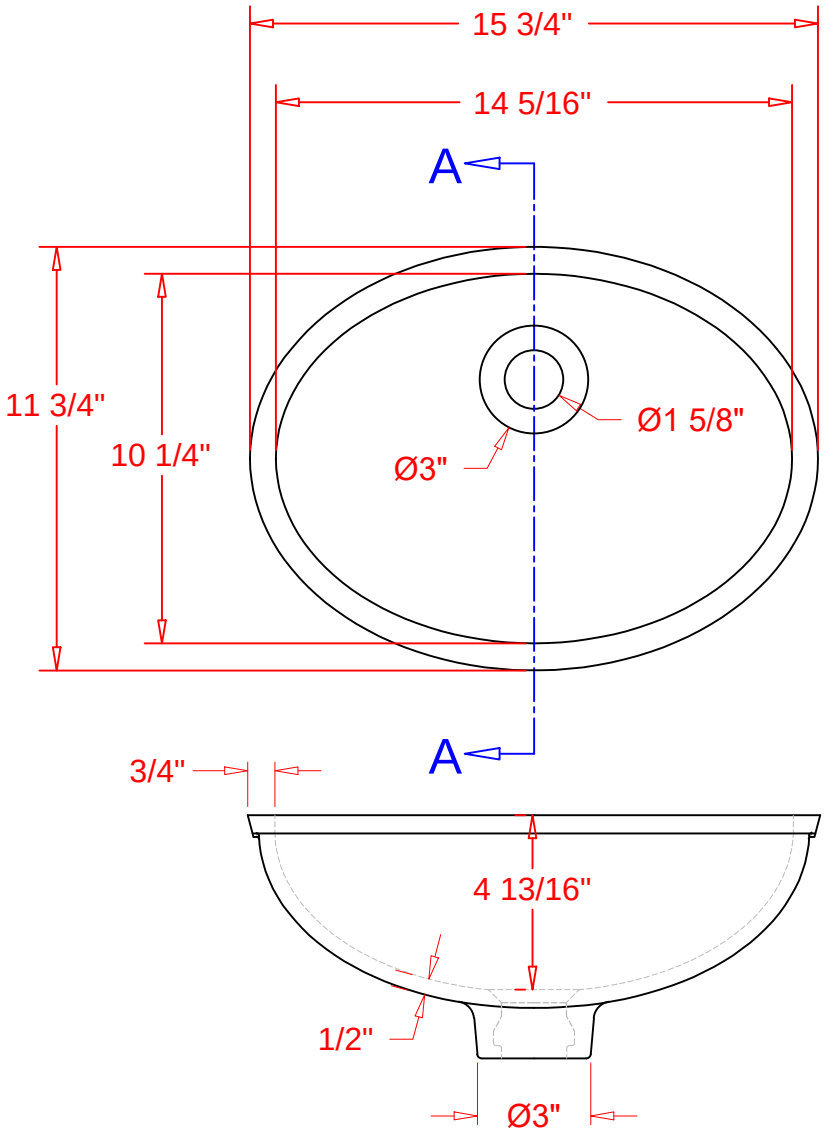

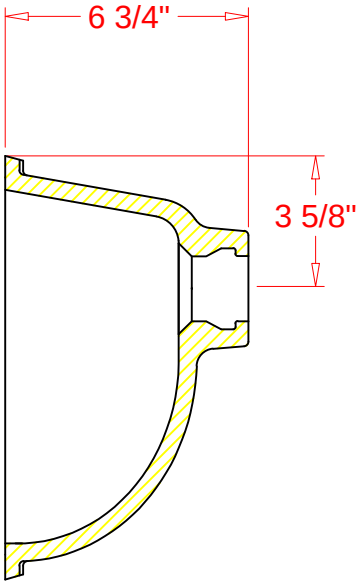

Section A-A

Wilsonart®
SOLID SURFACE

Part Number:	AV1410				
Description:	Small Oval Vanity Bowl				
Date Drawn:	02 / 13 / 2019	Weight:	6.9 Lbs	Scale:	None
Drawn By:	Carlos Hernandez			Revised By:	
Approved By:	Daniel Shin			Date:	01 / 09 / 2019

Customer Approval: Date:

Path: @Engineering\